RENO MATTRESS LID NETTING
GALMAC & POLYMER COATED

TECHNICAL DATA SHEET - Rev. 05, Date 01-12-2011

Castoro Reno Mattresses are units made of hexagonal double twisted wire mesh. They are filled with rocks at the project site to form flexible, permeable, monolithic structures such as river bank protection and channel linings for erosion control.

The Castoro Reno Mattress is divided into cells by means of double diaphragms positioned at approximately 1m centers (Figure 1). The base of the unit and the internal diaphragms are manufactured from one continuous mesh panel. In order to reinforce the structure, all mesh panel edges are selvedged with a wire having a greater diameter (Table 3). Standard roll sizes of Galmac + PVC coated Lid Netting are shown in Table 1.

Steel wire mesh

The double twisted steel wire mesh used in the production of Lid Netting has mechanical characteristics higher than those stated in EN 10223-3.

The nominal tensile strength of the mesh shall be as per Table 2; test done in accordance with EN 15381, Annex D.

Wire

The steel wire used in the manufacture of Lid Netting is heavily galvanized with Galmac, a Zn-5%Al alloy. A PVC coating is then applied to provide added protection for use in aggressive environments where soils are acidic, in salt or fresh water, or wherever the risk of corrosion is present. The PVC coating has a nominal thickness of 0.50 mm.The standard mesh specifications are shown in Table 2.

All tests on wire must be performed prior to manufacturing the mesh.

1. **Tensile strength:** the wire used for the manufacture of gabions shall have a tensile strength between 380-550 N/ mm^2, which exceeds the strengths referred to in EN 10223-3. Wire tolerances (Table 3) are in accordance with EN 10218 (Class T1).
2. **Elongation:** Elongation shall not be less than 10%, in accordance with EN 10223-3. Test must be carried out on a sample at least 25 cm long.
3. **Galmac coating:** minimum quantities of Galmac shown in Table 3 meet the requirements of EN 10244-2 (Table 2 - Class A).
4. **Adhesion of Galmac:** the adhesion of the Galmac coating to the wire shall be such that, when the wire is wrapped six turns around a mandrel four times the diameter of the wire, it does not flake or crack when rubbing it with bare fingers, in compliance with EN 10244.
5. **Outwearing accelerated aging test in SO2:** 28 cycles in accordance with EN ISO 6988.

P.V.C. (Polyvinyl Chloride) Coating

The technical caracteristics and the resistance of the PVC to ageing meet the relevant standards. The main values for the PVC material, according to EN 10245-2, are as follows:

Specific weight: 1.30-1.35 kg/dm^3 according to ISO 1183;

Hardness: between 50 and 60 Shore D, according to ISO 868

Tensile strength: higher than 21N/mm^2, according to ISO 527

Elongation at break: not less than 200%, in accordance with ISO 527;

Colour: grey-RAL 7037

Resistance to UV radiation: After 4000 hours of exposure to UV light according to ISO 4892-2 or ISO 4892-3, the tensile strength and elongation at break can not vary by more than 25%.

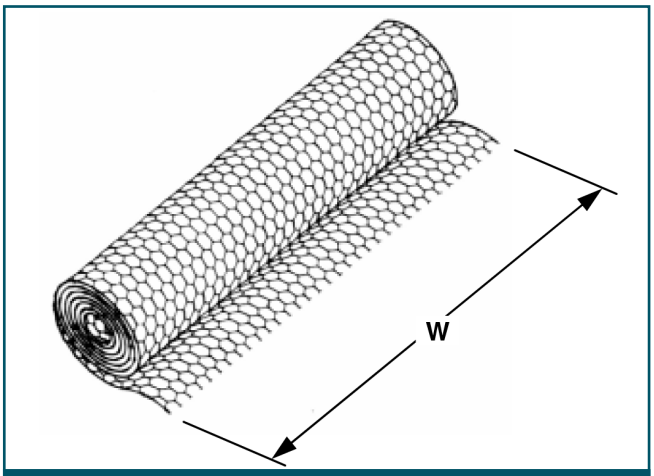

Figure 1

The tolerance on the opening of mesh 'D' being the distance between the axis of two consecutive twists, is according to EN 10223-3

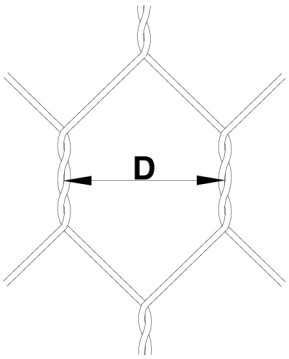

Figure 2

Typical Lid Netting Application

Table 1 - Sizes of Rockfall netting rolls	
L=Length (m)	W=Width (m)
50	2.00

*** Non-standard roll sizes may be available**

All sizes and dimensions are nominal.
Tolerances of 0/+1 m of the length, and ± D of the width shall be permitted

Table 2 - Standard mesh specification					
Type	D (mm)	Tolerance	Internal Wire Diameter (mm)	External Wire Diameter (mm)	Mesh Tensile Strength (kN/m)
6x8	60	+16%/- 4%	2.00	3.00	32

Table 3 - Standard wire diameters			
	Mesh Wire	Selvedge Wire	Lacing Wire
Wire Diameter ø mm	Int.2.0/ Ext.3.0	Int.2.4/ Ext.3.4	Int.2.2/ Ext.3.2
Wire Tolerance (±) ø mm	0.06	0.07	0.06
Min. Quantity of Galmac gr/m²	215	230	230

Lacing Operations

Lacing operations can be made by using the tools shown in Fig.5. Stainless steel rings having the following specification can be used as an alternative to lacing wire when Galmac+PVC coated Lid Netting is used (Figs. 3, 4):

- diameter: 3.00 mm, ASTM A975-97, Table 1
- tensile strength: 1530-1745 MPa, ASTM A313, Table 5
- stainless steel grade: Type 302, ASTM A313, Table 1

Spacing of the rings must not exceed 150 mm (Fig.3)

Please contact Geofabrics for detailed installation information

Quantity Request

When requesting a supply quotation, please specify:

- size of units (length x width, see Table 1),
- type of mesh,
- type of coating

EXAMPLE: No.100 rolls Length=50m, Width=2.0m - Mesh type 6x8 - Wire diam. 2.0 mm - Galmac + PVC coated

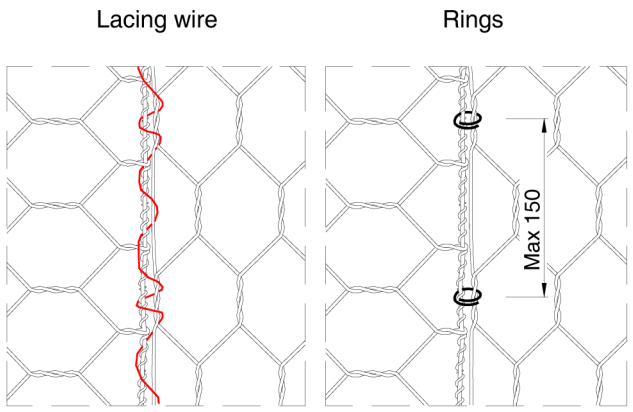

Figure 3

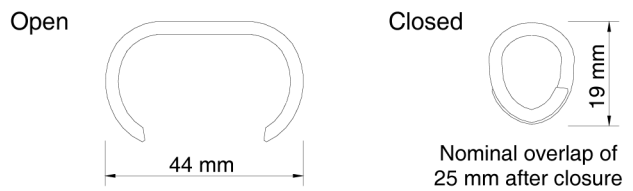

Figure 4

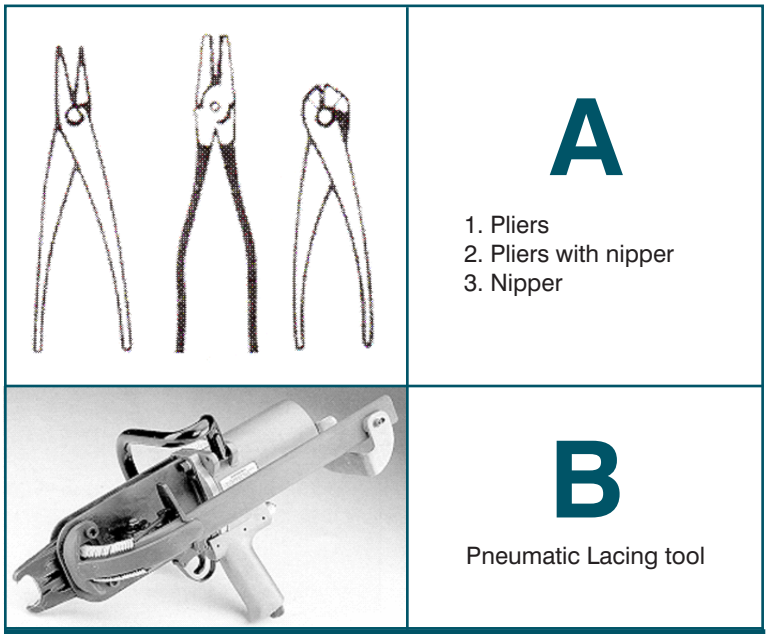

Figure 5

Geofabrics reserves the right to amend product specifications without notice and specifiers are requested to check as to the validity of the specifications they are using. The information presented herein is, to the best of our knowledge and belief, correct. The validity of the information relative to the soil and engineering conditions must be ascertained by a suitably qualified person. No warranty is either expressed or implied. Unauthorised reproduction or distribution is prohibited.